REVISIONS			
REV	DESCRIPTION	DATE	APPROVED
A	RELEASED FOR PROD	11-28-78	R.W.S.

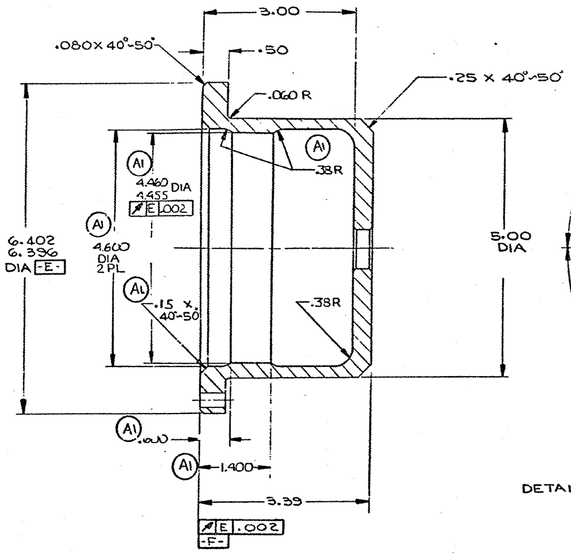

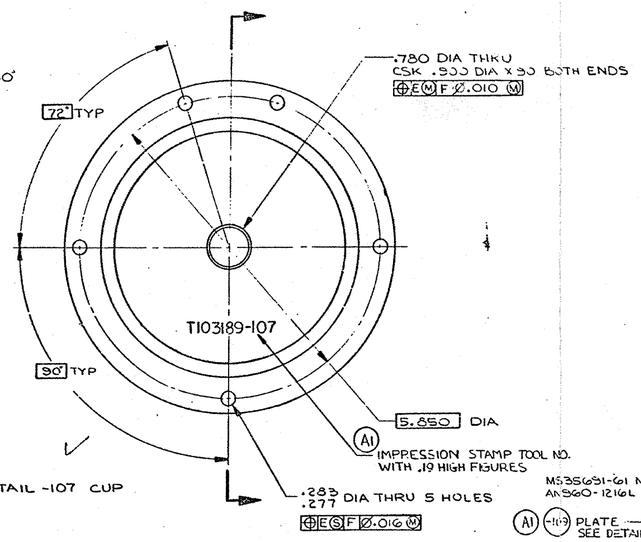

DETAIL -107 CUP

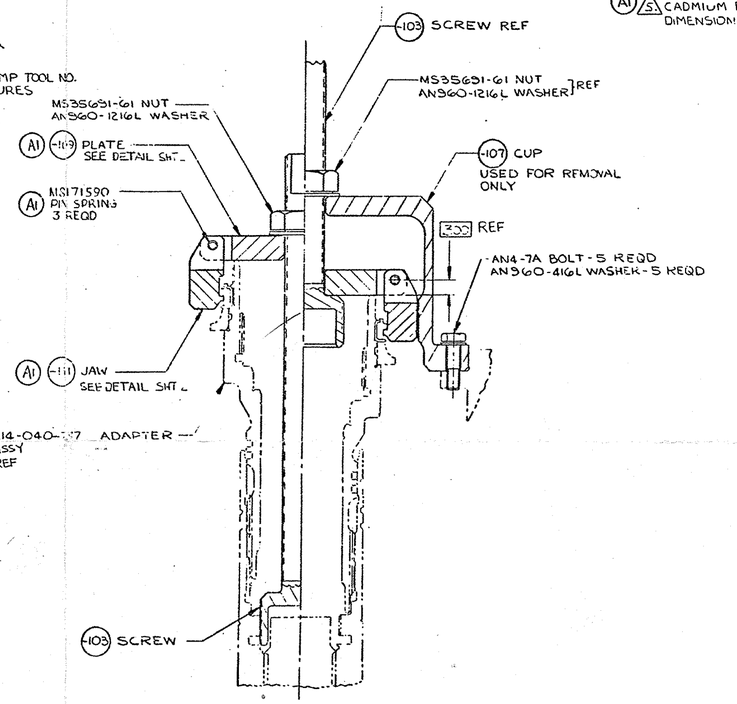

NOTES:

A1 1. T103189 IS USED TO INSTALL AND REMOVE THE 214-040-117 ADAPTER ASSEMBLY IN/FROM THE T-700 ENGINE OUTPUT SHAFT.

2. BREAK ALL SHARP EDGES .030R OR .030 X 40°-50°

3. ALL UNDESIGNATED SURFACES A B .010 FOR -103, C D .010 FOR -105 AND E F .010 FOR -107

4. T103189 MUST BE STOCKED AS A SET.

A1 △5 CADMIUM PLATE PER FEDERAL SPEC QQ-P-416, CLASS 2, TYPE II. DIMENSIONAL LIMITS APPLY AFTER PLATING

RELEASED FOR PROD
DATE: 8/19/80 INT: RWS

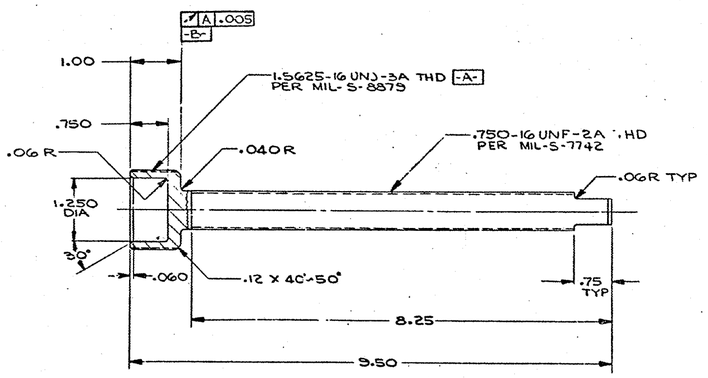

DETAIL -103 SCREW

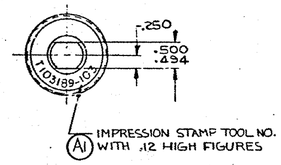

1 per. -101

REV STATUS OF SHEETS	REV	A	A					
	SH	1	2					

	QTY PER	PART OR IDENTIFYING NO	CODE IDENT NO	NOMENCLATURE OR DESCRIPTION	STOCK SIZE	MATERIAL	MATERIAL SPEC	FINISH
A1	3	T103537-111		JAW	1.25X1.25X1.7	4140 ALY STL	COMMERCIAL	S
A1	1	T103189-109		PLATE	.425 DIA X .9	4140 ALY STL	COMMERCIAL	A
A1	3	MS171590		PIN SPRING	3/16 X 1"	STD	ROLL PIN	
	1	MS35691-61		NUT		STD		
	1	AN960-1216L		WASHER				
	5	AN960-416L		WASHER				
	5	AN4-7A		BOLT		STD		
	1	T103189-107		CUP	6.5 DIA X 3.7	4140 ALY STL	COMMERCIAL	S
A1		~~T103189-105~~						
	1	T103189-103		SCREW	2.0 DIA X 10.0	4140 ALY STL	COMMERCIAL	S
		T103189-101		TOOL SET				

PARTS LIST EWA 8031 AN W.O. 8031

SOURCES QUALIFIED AND APPROVED BY BHT FOR STANDARDS AND MATERIALS ARE LISTED IN REPORT 299-099-900.

FOR APPROVED INTERCHANGEABLE EQUIVALENTS AND SUPERSEDED PARTS — SEE BHT STANDARD 170-001

PROPRIETARY RIGHTS NOTICE
THESE DATA ARE PROPRIETARY TO BELL HELICOPTER TEXTRON. DISCLOSURE, REPRODUCTION OR USE OF THESE DATA FOR ANY PURPOSE IS FORBIDDEN WITHOUT WRITTEN AUTHORIZATION FROM BELL HELICOPTER TEXTRON.
THE FOREGOING DOES NOT APPLY TO VENDOR PARTS

DASH NO	NEXT ASSY	USED ON APPLICATION
101	TEST	2003AN03

UNLESS OTHERWISE SPECIFIED
1 MARK PER BPS 4052
2 ~~BREAK ALL SHARP EDGES .005 R-.015 R.~~
3 TORQUE PER BPS 4018
4 SAFETY PER BPS 4043
5 DIMENSIONAL LIMITS APPLY AFTER PLATING

APPLICABLE DOCUMENTS
ABBREVIATIONS PER MIL-STD-12
DIMENSIONING AND TOLERANCING PER ANSI Y14.5-1973
ELECTRICAL SYMBOLS PER ANSI Y32.2
ELECTRICAL PART DESIGNATIONS PER ANSI Y32.16

MIL-H-6875

UNLESS OTHERWISE SPECIFIED DIMENSIONS ARE IN INCHES
TOLERANCES ON DECIMALS .XX ± .01 .XXX ± .005
ANGLES ± 1°
SURFACE ROUGHNESS PER ANSI B46.1
MACHINED SURFACES EXCEPT AS NOTED

DRAWN E. ABRAHAM 12-7-78
CHECKED [illegible] 2-13-79
STRESS [illegible] 2/19/79
WEIGHTS
GROUP ENGR [illegible] 7-13-79
CONTR [illegible] 7-6-79
DER
MET DESIGN
PROJECT A. Farley 7/10/79
CUSTOMER ao

Bell Helicopter TEXTRON
Division of Textron Inc.
POST OFFICE BOX 482 • FORT WORTH, TEXAS 76101

TITLE TOOL SET - ADAPTER INSTALLATION AND REMOVAL

DWG SIZE	CODE IDENT NO	DWG NO
E	97499	T103189
SCALE 1/1	ISSUED	SHEET 1 OF 2

T1-9-25-79

SHOP COPY

REVISIONS			
REV	DESCRIPTION	DATE	APPROVED
A	THIS SH ADDED	[illegible]	Woods

RELEASED FOR PROD.
DATE: 8/19/10 INT: [illegible]

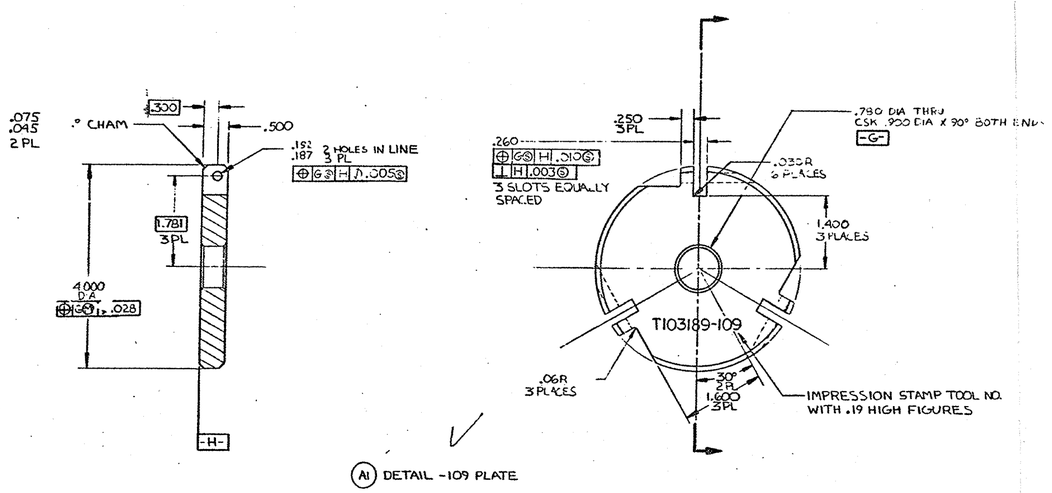

(A1) DETAIL -109 PLATE

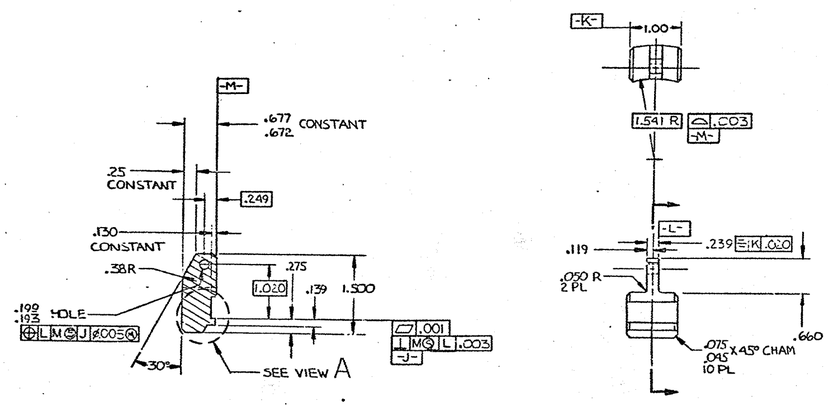

(A1) DETAIL -111 JAW

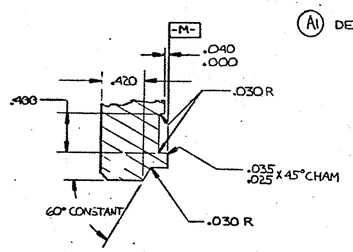

VIEW A
SCALE 2/1

~~SEE SEPARATE PARTS LIST~~

PROPRIETARY RIGHTS NOTICE
THESE DATA ARE PROPRIETARY TO BELL HELICOPTER TEXTRON DISCLOSURE, REPRODUCTION, OR USE OF THESE DATA FOR ANY PURPOSE IS FORBIDDEN WITHOUT WRITTEN AUTHORIZATION FROM BELL HELICOPTER TEXTRON
THE FOREGOING DOES NOT APPLY TO VENDOR PARTS

DASH NO	NEXT ASSY	USED ON
	APPLICATION	

PROPRIETARY RIGHTS NOTICE
THESE DATA ARE PROPRIETARY TO BELL HELICOPTER TEXTRON DISCLOSURE, REPRODUCTION, OR USE OF THESE DATA FOR ANY PURPOSE IS FORBIDDEN WITHOUT WRITTEN AUTHORIZATION FROM BELL HELICOPTER TEXTRON
THE FOREGOING DOES NOT APPLY TO VENDOR PARTS

UNLESS OTHERWISE SPECIFIED DIMENSIONS ARE IN INCHES
TOLERANCES ON DECIMALS .XXX ± .010 .XX ± .03 .X ± .1 ANGLES ± 1/2°
SURFACE ROUGHNESS PER ANSI B46.1
✓ MACHINED SURFACES EXCEPT AS NOTED

DRAWN
CHECKED
STRESS
WEIGHTS
GROUP ENGR
DER
MET DESIGN
PROJECT
CUSTOMER

Bell Helicopter TEXTRON
FORT OFFICE BOX 482 FORT WORTH, TEXAS 76101
Division of Textron Inc

TITLE

DWG SIZE	CODE IDENT NO	DWG NO
E	97499	T103189

SCALE 1/1 ISSUED SHEET 2 OF

SHOP COPY

SHOP COPY